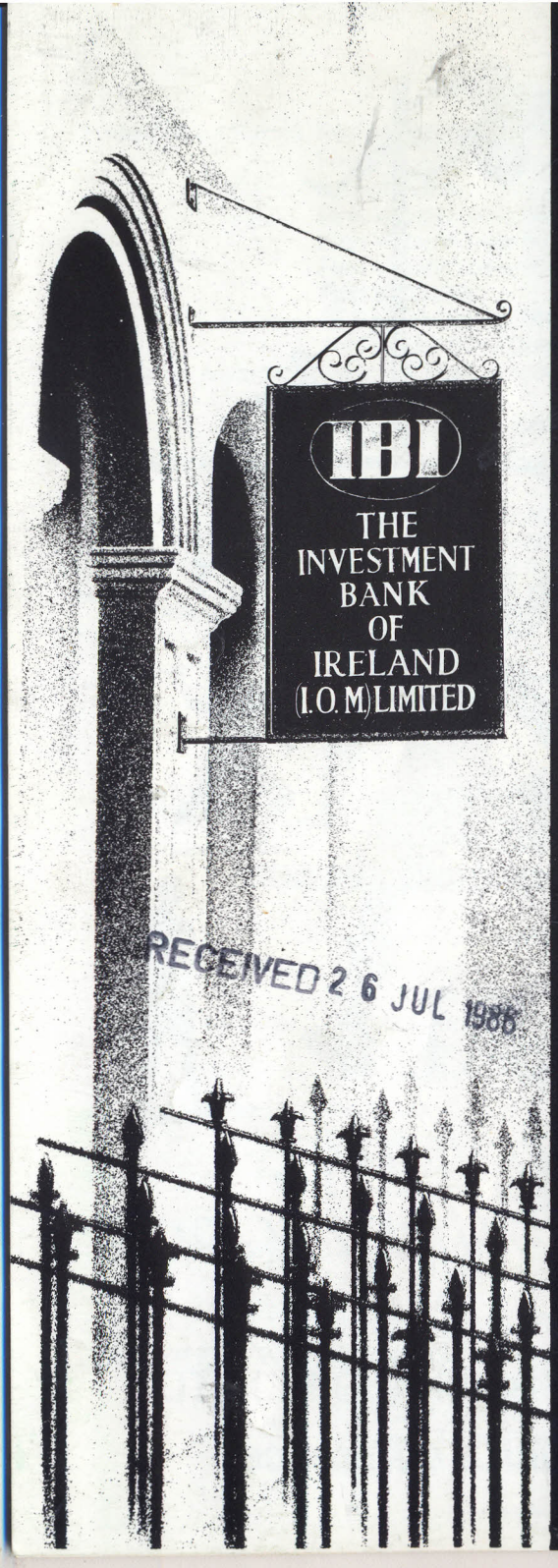

RECEIVED 26 JUL 1985

WE CHOSE THE ISLE OF MAN

FOR....

Its business climate – yes

Its stability – yes

Its accessibility – yes

And in less than three years our assets have grown beyond £100 million.

SEVERAL THOUSAND CUSTOMERS CHOSE US FOR....

Security – we are a subsidiary of Bank of Ireland with over £5000 million assets and 200 years experience.

Confidentiality – our private computer system keeps private affairs private.

Attention to detail – we concentrate on the things we do best.

Friendly service – contact Kevin Doyle to find out what we can do for you.

- Deposits in Sterling, Irish Pounds, U.S. Dollars and other major currencies, at call or for fixed maturities.
- Foreign Exchange dealings in all major currencies.
- Secured Loans – 'Back to Back' loans, Guarantees and Credits in all major currencies.
- Personal Holding Company Management Services.
- Trusteeships of Discretionary and other Settlements.
- Safe Custody of Registered Securities in Nominee Name.

IBI

THE INVESTMENT BANK OF IRELAND
(I.O.M.) LIMITED
20 Finch Road, Douglas, Isle of Man
Telephone Douglas (0624) 29661
Telex 628270

ISLE OF MAN '85 YEAR OF SPORT

MANX AMATEUR ATHLETIC CLUB

OFFICIAL PROGRAMME

(under AAA and WAAA Laws)

23rd EASTER ATHLETIC FESTIVAL • 1985

PRICE 50p

C.494/A

Are your travel and accommodation bookings turning into a MARATHON? Then why not leave it to the experts:

GROUP & CONFERENCE TRAVEL

CENTRAL PROMENADE
DOUGLAS
ISLE OF MAN
Telephone: (0624) 27711
Telex: 627742

GIVEN TO THE LIBRARY BY
Mr. John Wright, Onchan
DATE 26th July 1986
No: 13860 CLASS C494/A

Message from the Chairman . . .

It is with great pleasure that I welcome you to our 23rd Easter Festival which is a major aspect of the Island's 'Year of Sport' programme. We hope to mark this special occasion by yet another increase in the number of competitors.

Over the years, your support, has helped us to produce an improvement in the quality of facilities and prizes.

Last year we introduced computerised entries and with the experience gained in handling 790 individual competitors, we are looking forward to an improved results service for individuals and teams.

I thank all the committee and friends, for their much needed help, and the competitors for their participation.

RAY CORLETT

Officials of the Meeting

Chairman:	Ray Corlett.
Festival Secretary:	Walter Capelen.
Treasurer:	Bob Baxter.
Sub. Committee:	Graham Davies, Ray Corlett, Ron Corlett.
Time Keepers:	Harry Kinnear (Chief), Peter Lees, Kevin Madigan, Brian Collister, Norman Graves, Ken Bawden, Peter Bargery.
Recorders:	Brenda Charlton, Jean Bostock, Denise Corkill, Anne-Marie Lees, Joan Walton, Cathy Kelly, June Collister, Members and Friends of Manx A.C.
Results Auditor:	Fred Newton.
Results Compiler:	Cathy Kelly.
Finishing Stewards:	Graham Davies (Chief), Michelle Herriott, Members and Friends of the Manx A.C.
Course Marking and Marshals:	Members and Friends of Manx A.C. and Island Clubs.
Public Address:	Peter McElroy.
Referee's:	Maurice Herriott

Festival Headquarters:	Villiers Hotel, Loch Promenade, Douglas.
Hours of Opening:	Friday — 15.00 to 17.00 Saturday — 10.00 to 11.30 Sunday — 8.30 to 10.00

KENMAC

In Control Worldwide

Leaders in Mechanical Instrumentation and Fluid Control Equipment

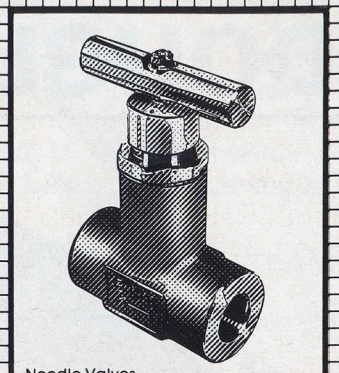

Needle Valves
6,000 psi max & 10,000 psi max

Kenmac's high manufacturing standards ensure reliability, safety and extended life in service. There is a continuous process of controlled improvement using modern production equipment to match increasingly stringent operating conditions. The quality and reliability of the Kenmac product range ensures that it is supremely cost effective in use.

Multi-Port Gauge Valves

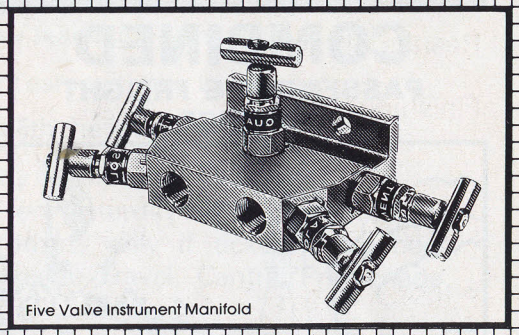

Five Valve Instrument Manifold

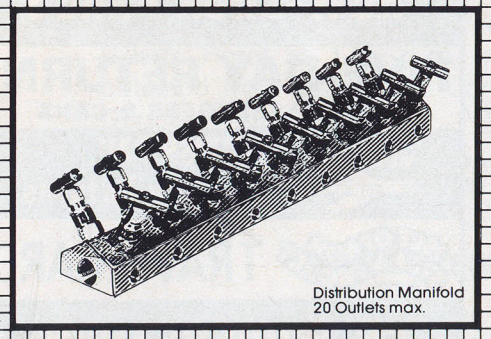

Distribution Manifold
20 Outlets max.

Instrument Enclosures

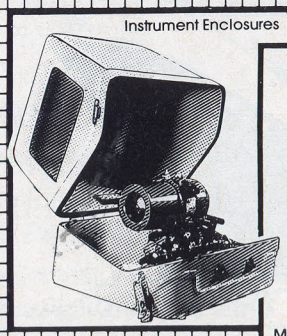

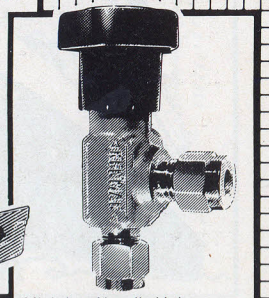

Miniature Needle Valve
Range includes: Ball, Check Valves & Filters

KENMAC

KENMAC Controls Limited
Snugborough
Isle of Man
Great Britain
telephone 0624 29123
telex 627474 (Kenmac-G)

Keeping The Pressure On

ISLE OF MAN STEAM PACKET
Seaways

P.O. Box 5
Douglas, I.O.M.
Tel. 0624 23344

HEYSHAM-DOUGLAS

STARTS
1st APRIL

BIGGER
SHIPS

SHORTER
SEA ROUTE

COMBINED
PASSENGER & FREIGHT
SERVICE

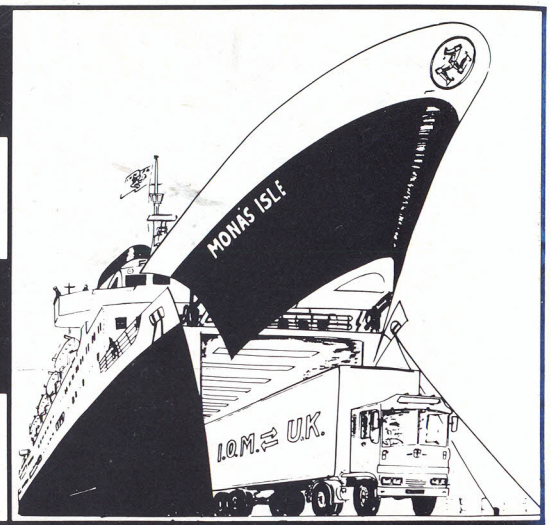

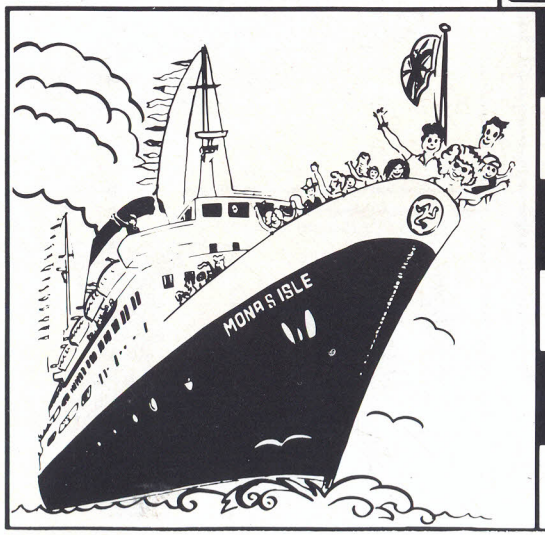

NEW-LOOK FARES

FIVE-DAY RETURNS
FOR PASSENGERS & CARS

BRITISH RAIL
Monthly Returns

ISLE OF MAN STEAM PACKET Seaways TRAVELCARDS

60-HOUR RETURNS

NEW SINGLE FARES

IMPORTANT INFORMATION

In the event of a tie in team races the winning team will be decided on the fastest time.

PLEASE NOTE: In all races, numbers are to be secured firmly so as to be CLEARLY visible at the end of each race. Numbers must be worn on FRONT of vest.

NUMBERS issued on First Day to be used throughout the Festival (Except Relay Race – different numbers).

PLEASE NOTE: All athletes are requested to be at the starting line 15 MINUTES before their race starts. All times subject to alteration by Committee.

TEAM DETAILS

1. Teams for Friday, Saturday and Sunday to be declared (4 to run, 3 to score).
2. Running Order for Sunday to be declared on the Sunday. Relay Numbers to be collected also on Sunday.
3. Teams **must** be the same throughout the Festival.
4. Individuals may form composite relay teams for Sunday (**4** to run).
5. Student Champions will be Student Team with the lowest score.
6. Team Champions will be the Team with the lowest score.
7. Beer drinking teams to be declared by Saturday — 11.30 a.m.

N.B. Special coaches leave for Peel on Saturday Afternoon from the Villiers Hotel at **1.15 p.m. prompt**, only if tickets have been obtained from Group and Conference Travel, Central Promenade, Douglas. Telephone 27711.

Hours of Opening at Group and Conference Travel: Friday and Saturday 4.00 p.m. to 5.00 p.m.

PRIZE PRESENTATION

Easter Sunday, 7th April, 1985
The Palace Lido
Doors open 1800 Prize Presentation 1830
Beer Drinking Contest
(Teams to be declared on Saturday by 11.30 a.m.)
ADMISSION BY TICKET ONLY AVAILABLE FROM FESTIVAL H.Q.

ALPHA SPORTS LTD.

Market Street, Douglas
Telephone: (0624) 25295

(Opposite Liptons)

ACCESS & BARCLAYCARD ACCEPTED

BARCLAYCARD VISA

LILLYWHITE FROWD FRANCHISE

Our Thanks go to the Following

The Manx Athletic Club wish to thank the following for their assistance in staging the Festival:

I.O.M. Constabulary
I.O.M. Tourist Board
Douglas Corporation
Peel Town Commissioners
Villiers Hotel, Douglas
Group and Conference Travel
I.O.M. Home Affairs Board
Bowring Tyson (I.O.M.) Ltd.
Marown Engineering Ltd.
Supporters of the Festival
St. Johns Ambulance
Palace Travel
American Express (Take a Break) Holidays

We would like to express our thanks to all Advertisers in this programme.

PLEASE SUPPORT THEM

Be one of the first . . .

And make sure you go away with some fantastic bargains!! *See all the latest gear for Summer '85 in Wranglers and Levis for Guys and Girls from —*

ESQUIRES

STRAND STREET

*

DOUGLAS

BAY RIDGE

Guest House Douglas

(2 mins. from Sea Terminal)

Licensed, Games Room
Sauna & Solarium

Tel: 74402

Ron and Carole Corlett

PORTABELLA
11 Empire Terrace
off Central Promenade
Douglas
Telephone: (0624) 76400

Licensed Guest House. Open all year.
Terms from £5 per day.
Warm clean accommodation with good food.

We have double or twin rooms for couples or friends, all with power plugs and hot & cold water. Large family rooms.
All sports groups and social clubs.
(Organisers free)

School parties welcome all year. Teachers free. Very low rates. Free entertainment in the bar Sunday nights. Video films in the lounge. Bar snacks served. Packed lunches on request. Hot or cold lunches served between 12 noon and 1.30 p.m.

You have access to rooms, showers, sauna any time. Front door keys

So if you fancy a holiday at the Portabella — get in touch with Joyce Corlett

The way to look at International banking services is through BCC

The Bank of Credit and Commerce International was *born* international — a fact which has certainly helped its growth. The BCC Group has offices in 70 countries. Capital funds stand at over US$ 808 million and total assets exceed US$ 12,000 million.

Whatever international banking services you need, a talk with your local BCC manager could be very useful. Speed, efficiency and *your* convenience are what count at BCC.

BANK OF CREDIT AND COMMERCE INTERNATIONAL

Isle of Man — Douglas, 40 Victoria Street
Telephone: 0624 23982 Telex: 629760 BCCIOM G

RACE INFORMATION

Good Friday
EVENT "A"

Youths 3 miles. 6.45 p.m.

Changing facilities: None. Please arrive changed.

Winner 1984 — A. Moffitt (Aldershot Farnham & Dist.)
Record — 1982 — T. Leach (Rotherham H. & A.C.) — 17.42

Start. On Loch Promenade outside The Falcon Hotel.

Course: Along Promenade to bottom of Broadway, turn left up hill to traffic lights, turn left down Bray Hill to Quarterbridge, turn left along Peel Road to Quayle's Garage (Marshalled), down Lord Street, past Bus Station to Sea Terminal (Marshalled) and onto Promenade and along to finish.

Good Friday
EVENT "B"
Ladies & Mens 5 miles. 7.30 p.m.

Changing facilities: None. Please arrive changed.

Winner 1984 — P. Fowler (Staffordshire Moorlands)
Record — 1982 — S. Anders (St. Helens) — 24.50

Start. On Loch Promenade opposite The Falcon Hotel.

Course: Along Promenade to bottom of Summerhill, across road (Marshalled), up hill and turn left up Blackberry Lane (Marshalled) to top, turn left along Glencrutchery Road to traffic lights (Marshalled), down hill to Quarterbridge, turn left (Marshalled) along Peel Road to Quayle's Garage (Marshalled), down Lord Street past Bus Station to Sea Terminal across at Marshal to Promenade and along to finish.

Good Friday — Road Races Senior Men — Winners

1965 Eric Austin (Worcester)
1966 John Whetton (Sutton-in-Ashfield)
1967 Dave Hindley (Waterloo Harriers)
1968 R. McAndrew (Reading A.C.)
1969 Andy Holden (Birmingham Univ.)
1970 Andy Holden (Birmingham Univ.)
1971 Andy Holden (Birmingham Univ.)
1972 Herbie Broadbent (Durham College)
1973 Tony Moore (Oxford Univ.)
1974 Ricky Wilde (Manchester)
1975 Alan Rushmer (Tipton H.)
1976 Filbert May (Airedale)
1977 Graham Ellis (Holmfirth H.)
1978 Nick Sloane (FODAC)
1979 Adrian Royle (Manchester H.)
1980 Bob Holt (Hercules & Wimbledon)
1981 Tony Blackwell (Wolverhampton & Bilston)
1982 S. Anders (St. Helens)
1983 A. Douglas (Glasgow Univ.)
1984 P. Fowler (Staffordshire Moorlands)

Good Friday — Youths Road Races — Past Winner

1970 G. Staunton (Galway)
1971
1972 L. George (Pilkington A.C.)
1973 A. McCauley (Sutton A.C.)
1974 Steve Fairclough (Rainbow Chasers)
1975 Tony Halisdrov (Tipton H.)
1976 Paul Dodds (Morpeth H.)
1977 R. Partridge (Individual)
1978 D. Jackson (Blackburn A.C.)
1979 A. Barlow (Moston Brook School)
1980 A. Reynolds (Stoke)
1981 Mark Aldersley (King Henry VIII School)
1982 T. Leach (Rotherham H. & A.C.)
1983 S. Campbell (Glasgow Univ.)
1984 A. Moffit (Aldershot Farnham & Dist.)

Good Friday — Ladies Road Races — Past Winners

1984 B. Everley (Leicester University A.C.)

adidas puma

CITY SPORTS

29 MICHAEL STREET, PEEL

Telephone: Peel 3333

A wide range of Sporting goods of nearly every description always in stock, including advice!

(Don't forget our 24 hour re-stringing Racket!)

Allied Irish Banks (I.O.M.) Limited

offers a specialised banking service including Current Accounts, Loan facilities and the acceptance of Deposits. Enquiries will be welcomed by the Manager

MR. GORDON SIMPSON

at

21 Athol Street, Douglas,
Isle of Man
Telephone: 24315
Telex: 628782

A MEMBER OF THE ALLIED IRISH BANKS GROUP
(Assets in excess of £6 billion)

Allied Irish Banks (I.O.M.) Limited
(Incorporated in the Isle of Man)

For that Special Gift, Soft Toy or Greetings Card — go to . . .

Write Occasions

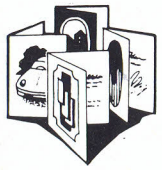

61 DUKE STREET, DOUGLAS.

RACE INFORMATION

Saturday
EVENT "A"
Senior Men. 2.15 p.m.

Changing facilities: Peel Swimming Pool.

Winner 1984 — K. McCluskey (Copeland A.C.)
Record — 1981 — Tony Blackwell — 20.01

Start. Swimming Pool, Peel.

Course: Along Promenade to Weatherglass Corner and along Quayside, bear right at Creek Inn past the Old Railway Station to bridge, across bridge and continue right 80 yards then left up path at side of road, then left up hill to steep section, continue along flagged path to Marshal at fork, then up to the tower, known as Corrin's Folly, at summit of hill. Touch Tower wall (Marshalled) and head down hill following flags but keeping to the right on the descent. At the fork in the path bear right taking a slightly different path to the foot of the hill and return to finish along Quayside and Promenade to finish at Swimming Pool.

Saturday — Hill Races — Past Winners

FELL RACE — SENIOR MEN
1975 Ricky Wilde (Manchester & Dist.)
1976 Filbert May (Airedale)
1977 Graham Ellis (Holmfirth H.)
1978 Nick Sloane (F.O.D.A.C.)
1979 Hugh Jones (Liverpool Univ.)
1980 Bill Sheridan (Westerlands)
1981 Tony Blackwell (Wolverhampton & Bilston)
1982 I. Archibald (Durham Univ.)
1983 J. Leniham (Riocht)
1984 K. McClusky (Copeland A.C.)

YOUTHS FELL RACE
1975 Tony Halisdrov (Tipton H.)
1976 Paul Dodds (Morpeth H.)
1977 S. Greenhaigh (Bolton Univ. H.)
1978 D. Jackson (Blackburn A.C.)
1979 Ian McBain (Wirral A.C.)
1980 Mark Aldesley (King Henry VIII School)
1981 R. Gaffney (Donore H.)
1982 T. Leach (Rotherham H. & A.C.)
1983 D. Marshall (Oldham H.)
1984 A. Moffit (Aldershot, Farnham & Dist.)

BOYS (UNDER 15) FELL RACE
1978 A. Warhurst (East Cheshire)
1979 Mark Aldersley (King Henry School)
1980 T. Larcombe (Liv. Pembroke)
1981 T. Larcombe (Liv. Pembroke)
1982 R. Deakin (Stoke A.C.)
1983 S. Moores (Oldham H.)
1984 S. Gibbons (Mid. Roscommon)

LADIES FELL RACE
1975 Jean Lockhead (Airedale)
1976 Jean Haigh (Longwood H.)
1977 Jean Haigh (Longwood H.)
1978 Jean Haigh (Longwood H.)
1979 Margaret Lockley (Luton)
1980 Barbara Harvie (Aberdeen Univ.)
1981 B. Murray (Aberdeen Univ.)
1982 S. Hales (Neston Comp. School)
1983 J. Asgill (Stretford)
1984 B.Everley (Leicester University A.C.)

JUNIOR LADIES FELL RACE
1980 L. A. Robinson (Spenborough)
1981 Helen Mackay (Manx A.C.)
1982 J. Rae (Melton A.C.)
1983 C. Poole (Neston)
1984 S. Pilling (Manx A.C.)

COLTS FELL RACE
1979 Ken Daley (Mullimear)
1980 S. Burton (North London)
1981 J. Johnson (Oxford City)
1982 M. Thompson (Neston G.R.)
1983 C. Lees (Oldham H.)
1984 A. Preedy (Burnley A.C.)

GIRLS FELL RACE
1979 Helen Mackay (Manx A.C.)
1980 J. Creamer (Rotherham)
1981 Jackie Crowe (Southern A.C.)
1982 R. Wilson (Rotherham H. & A.C.)
1983 S. Spencer (Liverpool H.)
1984 K. Jackson (Liv. Harriers)

There isn't a branch up Squeezer's Glen . . .

But it seems no matter where you turn there is one to suit your needs

The Lady Isabella started turning 130 years ago. Today she's no more than a magnificent piece of industrial archaeology for late 20th century tourists to wonder at.

The Isle of Man Bank is nearly as old, but unlike the Laxey Wheel, it still does a vital job of work in the world it was created for. It oils the wheels of the Manx economy – and the personal economies of thousands of individual customers.

It is the powerhouse of business development in agriculture, tourism and industry, and of home improvements and mortgages. It keeps on turning for newly-weds, the family man, youngsters in their first jobs or coping with the problems of student life and people on the verge of retirement. Its sweep embraces foreign business, personal loans, taxation, budget accounts, savings, executorships, investment management, insurance and pension plans.

But you want to know where Squeezer's Glen is. The Isle of Man Bank could tell you, even if it doesn't have a branch there.

Douglas · Castletown · Ramsey · Onchan · Ballasalla · Peel
Port Erin · Port St. Mary · Laxey · Kirk Michael

Isle of Man Bank Limited
A member of the National Westminster Bank Group
Head Office: 2 Athol Street, Douglas, Isle of Man. Telephone: 0624 26232.

RACE INFORMATION

Saturday
EVENT "B" — **Same Course Details for Events B & C.**

Youths. 3.05 p.m.

Winner 1984 — A. Moffit (Aldershot Farnham & Dist.)
Record — 1982 — T. Leach (Rotherham H. & A.C.) — 17.12

Saturday
EVENT "C"
– Ladies. 3.10 p.m.

Winner 1984 — B. Everley (Leics. Univ. A.C.)
Record — 1983 — J. Asgill (Stretford) — 19.30

Changing facilities: Peel Swimming Pool.

Start. Weatherglass Corner.

Course: Weatherglass Corner and along Quayside, bear right at Creek Inn past the Old Railway Station to bridge, across bridge and continue right 80 yards then left up path at side of road, then left up hill to steep section, continue along flagged path to Marshal at fork, then up to the tower, known as Corrin's Folly, at summit of hill. Touch Tower wall (Marshalled) and head down hill following flags but keeping to the right on the descent. At the fork in the path, bear right taking a slightly different path to the foot of the hill and return along Quayside to finish at Weatherglass Corner.

NIKE **TURNER** adidas
Sports and Leisure

Charles Turner, 47 Strand Street, Douglas. Tel: 74444
The Sports Centre, 56-58 Duke Street, Douglas. Tel: 74571
Sports, 11 Castle Street, Douglas. Tel: 75950

STOCKIST FOR ALL LEADING MANUFACTURERS.

Have a great Festival; we will be here next year!
HOPE YOU WILL TOO.

INTERSPORT® **Your local sports shops**

CASTLETOWN ALE OF MAN

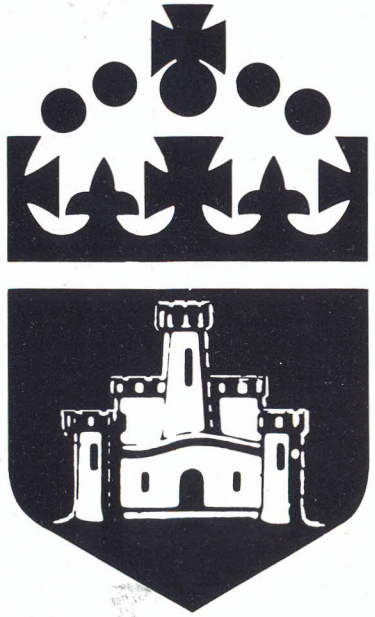

Tower Insurance

19 Athol Street, Douglas, Isle of Man
Telephone: (0624) 73446

A subsidiary of Royal Insurance (U.K.) Ltd

RACE INFORMATION

Saturday
EVENT "D"
Boys. 3.45 p.m.

Winner — 1984 — S. Gibbons (Mid. Roscommon A.C.)
Record — 1981 — T. Larcombe — 10.34

Start. Weatherglass Corner, Junction of Promenade and Quay.

Course: Along Quayside, bear right at Creek Inn past old Railway Station to bridge, across bridge and continue right 80 yards then left up path at side of road, then left up hill to steep section, continue along flagged path to turn Marshal and return to Quay by taking right-hand path at fork (Marshalled) then along to finish at Weatherglass Corner.

SATURDAY
EVENTS "E", "F" and "G"
Junior Ladies, Colts, Girls. 4.10 and 4.11 p.m.

Junior Ladies — Winner 1984 — S. Pilling (Manx A.C.)
Record — 1980 — L. A. Robinson 10.13
Colts — Winner 1984 — A. Preedy (Burnley A.C.)
Record — 1980/81 — S. Burton and J. Johnson 9.38
Girls — Winner 1984 — K. Jackson (Liverpool Harriers)
Record — 1984 — K. Jackson (Liverpool Harriers) 10.32

Start. Creek Hotel, Peel.

Course: Along to bridge, across bridge and continue right 80 yards, then left up path at side of road to marker and back to Creek Hotel.

Today we refreshed

A 17 piece dance band
25 Can-Can girls
At least 1 Member of the House of Keys
8 Ethiopian shepherds
1 picador
1 banderillero
19 Italian nuns on holiday
2 umpires
186,922 soccer fans
8 bouzouki players
A troupe of Norwegian acrobats
5 Russian tourists
1 Icelandic customs official
3 Basque fishermen
34 Members of the Japanese Diet
2 flamenco dancers
40 Legionnaires
and millions of others.

So if we, the Bottlers of Coca-Cola, missed you today, we'll refresh you tomorrow.

Enjoy Coca-Cola

It's the real thing.

Coca-Cola and Coke are registered trademarks that identify the same product of The Coca-Cola Company.

RACE INFORMATION

Sunday
EVENT "A"

Changing Facilities: None, please arrive changed.

Colts. **10.00 a.m.**

Start. On Queen's Promenade opposite the Terminus Tavern.

Winner 1984 — A. Preedy (Burnley A.C.)
Record — 1980/83 — S. Burton (North London), C. Lees (Oldham Harriers) 11.22

Course: Along Promenade to War Memorial, turn around at Marshal and back to start.

SUNDAY

EVENT "B" – Girls. **10.15 a.m.**

Winner 1983 — K. Jackson (Liverpool Harriers)
Record — 1983 — A. Spencer (Liverpool Harriers) 12.31

Start. On Queens Promenade opposite Terminus Tavern.

Course: Along Promenade to War Memorial, turn around at Marshal and back to start.

SUNDAY

EVENT "C" – Junior Ladies. **10.30 a.m.**

Winner 1984 — A. Radcliffe (Northern A.C.)
Record — 1980 — L. A. Robinson 12.07

Start. On Queen's Promenade opposite Terminus Tavern.

Course: Along Promenade to War Memorial, turn around at Marshal and back to start.

Sunday — Road Races — Past Winners

COLTS ROAD RACE

1979 Ken Daley (Mullimear H.)
1980 S. Burton (North London)
1981 J. Johnson (Oxford)
1982 P. Reid (Derwent A.C.)
1983 C. Lees (Oldham Harriers)
1984 A. Preedy (Burnley A.C.)

GIRLS ROAD RACE

1979 M. Daley (Mullimear H.)
1980 J. Creamer (Rotherham)
1981 C. Poole (Chester)
1982 R. Wilson (Rotherman H. & A.C.)
1983 A. Spencer (Liverpool Harriers)
1984 K. Jackson (Liverpool Harriers)

JUNIOR LADIES ROAD RACE

1980 L. A. Robinson (Spenborough)
1981 Helen Mackay (Manx A.C.)
1982 P. Richardson (Rotherham H. & A.C.)
1983 C. Poole (Neston)
1984 A. Radcliffe (Northern A.C.)

VIGILANT & VALIANT

SECURICOR

ISLE OF MAN LIMITED

incorporating

FRED ADLEM ELECTRICAL

CASH CARRYING — WAGE PACKETING
NIGHT SAFE WALLETS
OFFICE, FACTORY & DOMESTIC CLEANING
CARPET CLEANING & PROTECTION SERVICE
INTRUDER AND FIRE ALARMS
ALL TYPES OF ELECTRICAL SERVICES
MOBILE DOG PATROLS — STATIC GUARDS
NATIONWIDE PARCEL SERVICE
EXHIBITION SECURITY
COLLECTION OF SHOP TAKINGS
CLOSED CIRCUIT T.V. PROTECTION
CONFIDENTIAL SHREDDING

FOR FREE SURVEYS AND COSTINGS

33 Spring Valley
Ind. Est., Braddan
Isle of Man

APPROVED
NSCIA
INSTALLER

Ring
Douglas
20816

PRINT CENTRES LIMITED

offer clients an extensive service in the design and colour printing of BROCHURES, LEAFLETS and PUBLICITY MATERIAL of all types.

Various Business Stationery, including Forms, NCR Sets and Company Literature promptly and efficiently produced.

Ring 0624 26018 for service.

Print Centres Limited
Spring Valley Industrial Estate
Braddan
Isle of Man
Telephone 0624 26018

Print Centres Limited

SAVOY CATERERS
97 Strand Street
Douglas

Always a Winner
where food is concerned

MANX KIPPER SPECIALISTS

TWELVE MONTHS A YEAR SERVICE

VACUUM SEALED PACKS TO TAKE HOME WITH YOU

OUR KIPPERS ARE FANTASTIC

EST. 1884

ALWAYS BUY THE BEST DON'T BE SORRY LATER

THE LARGEST POSTAL SERVICE ON THE ISLAND

LOOK FOR THIS SHOP

WRITE FOR SOME TODAY

Remember if it's quality you want Then here's where you get it.

38 Strand St., Douglas.

DEVEREAU'S EST 1884
MANX KIPPERS

We are open on Easter Monday morning from

8 a.m. until 12 noon

For the Finest Manx Kippers in vacuum sealed packs
to take home with you or to post by
First Class Letter Post

38 Strand Street,
Douglas
and
Castle Street,
Douglas

Tel: 73257

RACE INFORMATION

Sunday
EVENT "E"

Winner 1984 — B. Everley (Leics. Univ. A.C.)
Record — 1983 — J. Asgill — 17.33

Ladies. 11.10 a.m.

Start. On Queen's Promenade opposite the Terminus Tavern.

Course: Along Promenade to Athol Hotel (marshalled) and return to start.

SUNDAY
EVENT "F"

Men's (4 × 3 miles) Relay. 11.30 a.m.

Winner 1984 — Glasgow University
Record — 1984 — Glasgow University — 58.08
Lap Record — 1984 — Tony Leach — 13.54

Start. On Queen's Promenade opposite the Terminus Tavern.

Course: Along Promenade to Athol Hotel (marshalled) and back to start.

Sunday — Road Races — Past Winners

LADIES ROAD RACE

1974 Jean Lockhead (Airedale)
1975 Christine Coleman (Highgate H.)
1976 Jean Haigh (Longwood H.)
1977 Jean Haigh (Longwood H.)
1978 Jean Haigh (Longwood H.)
1979 Collette Chapman (Bolton)
1980 Barbara Harvie (Aberdeen Univ)
1981 B. Murray (Aberdeen Univ)
1982 S. Hales (Neston Comp. School)
1983 J. Asgill (Stretford)
1984 B. Everley (Leics. Univ. A.C.)

1963 Wirral A.C.
1964 Wirral A.C.
1965 Worcester H.
1966 Sutton-in-Ashfield A.C.
1967 Sutton-in-Ashfield A.C.
1968 Rochdale H.
1969 Reading A.C.
1970 Oxford Univ.
1971 Derby & County A.C.
1972 Derby & County A.C.
1973 Oxford Univ.

MEN'S RELAY

1974 Manchester & District A.C.
1975 Tipton H.
1976 Essex Maniacs
1977 Hangover Harriers
1978 F.O.D.A.C.
1979 Wolverhampton & Bilston
1980 Glasgow Univ.
1981 Bolton United Harriers
1982 Bolton United "A"
1983 Leeds University
1984 Glasgow University

SENIOR MEN

1.	R. Yeomans	Aldershot, Farnham & District
2.	J. Hood	" "
3.	D. Brown	" "
4.	S. Smith	" "
5.	P. Donnelly	" "
6.	R. Keeney	" "
7.	S. Watson	" "
8.	M. Quinn	" "
9.	J. Watts	" "
10.	S. Crawte	" "
11.	P. Lewis	" "
12.	I. Logan	" "
13.	Steve Barnshaw	" "
14.	Stuart R. Graham	Altrincham & District A.C.
15.	Andrew Kurphy	" "
16.	I. P. Howard	Artists A.C.
17.	J. Coxon	"
18.	M. Longley	"
19.	D. Hunter	"
20.	J. Hart	"
21.	G. Locke	"
22.	O. Humphreys	"
23.	I. Davison	"
24.	P. Whyte-Venables	"
25.	R. Marsden	"
26.	Alex Morgan	Aston University
27.	Mike Fullilove	"
28.	Dominick Hussey	"
29.	Pat Wiggins	"
30.	George Keegan	"
31.	Tony Walton	"
32.	Don Wright	"
33.	A. Spelman	Athletic West
34.	G. Heffernan	"
35.	J. Conneely	"
36.	R. Donovan	"
37.	John Etchells (VO/40)	Barrow & Furness A.C.
38.	Alistair Rayment	Bath
39.	Peter Clarke	Bingley Harriers
40.	Derek Lawson (VO/50)	"
41.	Ian Ferguson	"
42.	Anthony Brayshaw	Bingley Harriers A.C.
43.	Ian Felce	Bletchley Bombers
44.	Dave Findel-Hawkins	"
45.	Paul Turner	Bolton United Harriers & A.C.
46.	William Shaw	"
47.	Brian Smith	"
48.	Adrian Selby	"
49.	Malcolm Rowbotham	"
50.	Steve Parkinson	Boundary Harriers
51.	Jim Anderson	"
52.	Martin Caley	"
53.	Kevin Groom	"
54.	Murray Lambden	"
55.	Robbie Lambie	"
56.	Alan Callow	"
57.	Steve Partington	"
58.	W. S. Basnett (VO/45)	"
59.	D. Higgins (VO/45)	"
60.	A. Kelly (VO/40)	"
61.	D. W. Wilkinson (VO/40)	"
62.	Brian Goldsmith	"
63.	M. Button	Bradford University C.C. Club
64.	B. Parkinson	" "
65.	G. Roberts	" "
66.	M. Wood	" "
67.	M. Moore	" "
68.	P. Wilson	" "
69.	A. Rawlings	" "
70.	Stephen Cowell	Bradley's Coal Runners
71.	Stephen Shirlay	" "
72.	Richard McCarthy	" "
73.	A. N. Other	" "
74.	Jonathan Forster	Cambridge University A.C.
75.	Jack Betney (VO/50)	Clayton-le-Moor
76.	A. Heyes	Clevedon A.C.
77.	Kevin McCluskey	Copeland A.C.
78.	R. Baumeister	Dark Peak Fell Runners
79.	G. Blackwell	Deeside A.C.
80.	A. Evans	"
81.	S. Gardner	"
82.	I. Hughes	"
83.	Andrew Fox	Deeside
84.	Joe Ritson	Derwent A.C.
85.	Tony Brooks (VO/40)	Doncaster Plant
86.	Ron Cotton (VO/40)	"
87.	Stephen Clegg	East Cheshire Harriers & Tameside A.C.
88.	Neil Reeve	" "
89.	Harry Kelly (VO/45)	" "
90.	Mark Cauldwell	" "
91.	G. Colvin	East Kilbride A.A.C.
92.	K. Clements	"
93.	G. Haddow	"
94.	A. McLachlan	"
95.	D. Gould	"
96.	Roger Alburey	Eton Manor A.C.
97.	Steve Becket	"
98.	Steve Fenton	"
99.	Paul Filler	"
100.	Mick Fitzgibbon	"
101.	Roger Warner	"
102.	Dave West	"
103.	Glyn Sayer	"
104.	Gordon Mitchell	Falkirk Victoria Harriers
105.	Robert Adams	" "
106.	Douglas Gibson	" "
107.	John Pentecost	" "
108.	John McGarva	" "
109.	Eddie McArd	Firemen's Sports & Social Club
110.	Ian Gardner	" "
111.	David Ansell	F.O.D.A.C.
112.	Phillip Marshall	"
113.	Malcolm Taylor	"
114.	M. Hancock (VO/45)	Ghost Runners
115.	Neil Walker	Glasgow Uni. Hares & Hounds
116.	Paul D. McIntyre	" "
117.	Bobby Quinn	" "
118.	John McClelland	" "
119.	Alister Douglas	" "
120.	Alisdair Kinniburgh	" "
121.	Phil Shering	" "
122.	Angus McCormick	" "
123.	Ross Welsh	" "
124.	Jim Stevenson	" "
125.	Tom Gillespie	" "
126.	M. H. Bromley (VO/55)	Hallamshire Harriers & A.C.

127.	Peter Freeman	Harrogate A.C.
128.	John Wilkinson	"
129.	Chris Devlin	"
130.	Clive Abbott	"
131.	Roo Walters	"
132.	Ian Windsor	"
133.	Simon Craddock	"
134.	Darren Good	"
135.	Paul Stockburn	"
136.	Paul Thackwray	"
137.	Lance Gilroy	"
138.	Jeremy Smith	"
139.	I. Isherwood	Hercules Wimbledon A.C.
140.	S. Littlewood	"
141.	A. Grimes	"
142.	D. Williams	"
143.	G. Nasey	"
144.	P. Raven	Hillingdon A.C.
145.	D. Fitzgerald	"
146.	P. Welch	"
147.	S. Atkinson	"
148.	David Headley	Hinckley Harriers
149.	A. Balmforfth	Holmfirth Harriers
150.	S. Beardsell	"
151.	R. Bradley	"
152.	A. Buckley	"
153.	A. Hauser	"
154.	A. Holmes	"
155.	R. Mellor	"
156.	I. Moore	"
157.	D. Sykes	"
158.	W. Swallow	"
159.	R. Page	Houghton Harriers
160.	C. Cresswell	"
161.	S. Pigford	"
162.	A. Page	"
163.	P. Dodsworth	"
164.	A. Carr	"
165.	G. Taylor	"
166.	A. Banerjee	"
167.	David J. McAlister	Lancashire Lancers
168.	Keith R. McAlister	"
169.	P. Calnan	Lancaster Uni. Past & Present
170.	N. Willis	" "
171.	A. Weatherall	" "
172.	A. Dent	" "
173.	Fernando Zelaya	" "
174.	Robin P. Hudson	Leeds University
175.	Jeremy Saynor	"
176.	Mike Balls	"
177.	Gary Toidings	"
178.	John Ayton	"
179.	Ian Groome	"
180.	Steve Jakeman	"
181.	Greg Hull	"
182.	Carl Hall	"
183.	Simon Higgins	"
184.	Al Morton	"
185.	John Pape	"
186.	Graham White	"
187.	Bill Taylor	"
188.	Andy Evans	"
189.	Dave Evans	"
190.	John Evans	"
191.	Mike Coleson	"
192.	Maurice Calvert	"
193.	Martin Farran	Leeds University
194.	Dave Parkinson	"
195.	Paul Collins	"
196.	Stuart Dick	"
197.	Quentin Tupper	"
198.	Ian Allenby	"
199.	Jez Dable	"
200.	Kev. Holroyd	"
201.	Paul Spencer	"
202.	Dave Sheepturd	"
203.	John Watkins	"
204.	Paul Williams	"
205.	Eric	"
206.	John	"
207.	A. N. Other	"
208.	F. Abbott	Leicester University A.C.
209.	R. Richardson	"
210.	V. Plod	"
211.	J. Weetman	"
212.	J. Dunn	"
213.	S. Holloway	"
214.	M. Grimshire	"
215.	J. Brewer	"
216.	P. Kay	"
217.	George Richardson	Loughton A.C.
218.	Mark Boardman	Manchester University Past & Present
219.	Stephen Francis	" "
220.	Nick Hanling	" "
221.	Dave Hoinville	" "
222.	Phil Kitchenside	" "
223.	Simon Martin	" "
224.	Richard Massey	" "
225.	Paul Miller	" "
226.	Roland Owen	" "
227.	Chris Paul	" "
228.	Barry Pearce	" "
229.	Rob Robinson	" "
230.	Steve Smith	" "
231.	Nigel Williams	" "
232.	P. J. Aidersley	Manchester Y.M.C.A.
233.	Graham Oates	Manx A.C.
234.	Chris Quine	"
235.	Paul Clarke	"
236.	Graham Clarke	"
237.	Mike Hannay	"
238.	Steve Kelly	"
239.	Brian Hollinrake	"
240.	Andrew Horne	"
241.	Colin Halsall	"
242.	Mark Bridson	"
243.	John Leece	"
244.	Ian Ellis	"
245.	Peter Corlett	"
246.	Dave Corrin	"
247.	Geoff Hall	"
248.	Graham Thwaites	"
249.	David Bawden	"
250.	Steve Higgins	"
251.	Dave Capelen	"
252.	Graham Gilmore	"
253.	Ian Callister	"
254.	Keith Callister	"
255.	J. Reynolds	Milton Keynes A.C.
256.	M. Shaw	"

257.	Frank Peters	Moston Brook High School
258.	Mark Peters	" "
259.	Billy Christy	" "
260.	Russell Weston	North London A.C.
261.	Costas Zacharides	"
262.	Peter Holland	"
263.	Nick Trainer	"
264.	Ron Lambert	"
265.	Cliff Barley	"
266.	S. Goodwin	"
267.	M. Goodwin	"
268.	J. Willoughby	"
269.	S. Hannaford	"
270.	J. Rene	"
271.	A. Cronin	"
272.	Dennis Orme	Old Gaytonians A.C.
273.	Roger Kraushaar	"
274.	Ian Barnfather	"
275.	Kenneth J. Stevenson	Paisley Harriers
276.	Graham White	"
277.	Stephen McGinness	"
278.	Philip Bailey	"
279.	James Flanagan	Pilkington's A.C.
280.	Damion Gerrard	"
281.	Nigel Barton	"
282.	A. N. Other	"
283.	Ken Woodhouse	Bert Quennell Athletes
284.	Stan Ogden	"
285.	Jimmy Crehan	"
286.	Phil Fearnley	"
287.	Clive Hulse	"
288.	Neil Smart	"
289.	Wayne Thorpe	"
290.	Anthony Crowin	Riocht A.C.
291.	John Cullen	"
292.	John Begly	"
293.	J. J. Hegerty	"
294.	Jack Culloby	"
295.	Danny O'Shea	"
296.	Neily Donnely	"
297.	I. Aitchinson	Rochdale Harriers
298.	B. Rigby	"
299.	D. Woodward	"
300.	A. Schofield	"
301.	R. Barlow	"
302.	M. Hobson	"
303.	P. Mills	"
304.	P. O'Hara	"
305.	D. Dickinson	"
306.	I. Holloway	"
307.	K. Shand	"
308.	R. Self	Rotherham H.A.C.
309.	B. Harney	"
310.	S. Dalton	"
311.	A. Shearman	"
312.	M. Gaynor	"
313.	M. Concannon	"
314.	C. Mangham	"
315.	S. Ellison	"
316.	M. Wilson (VO/40)	"
317.	D. Carratt (VO/40)	"
318.	O. Allan	"
319.	L. Elliss	"
320.	B. Gent (VO/40)	"
321.	D. Johnson (VO/40)	"
322.	R. Rowbothom (VO/45)	"
323.	K. Degg (VO/50)	Rotherham H.A.C.
324.	Robin Bergstrand	Sheffield University
325.	Matthew Blacoe	"
326.	Sam Carey	"
327.	Mark Cringle	"
328.	Robert Hand	"
329.	Tim Leader	"
330.	Tony Morris	"
331.	Mike Pedley	"
332.	Stuart Rose	"
333.	Toon Rottier	"
334.	Mike Smith	"
335.	Jimmy Thompson	"
336.	Michael Adams	Stilton Striders
337.	Percy Spencer (VO/40)	"
338.	Peter Young	"
339.	Graham Brooks	Stockport Harriers
340.	Alan Bagley	"
341.	Geoff Entwistle	"
342.	William Howes	"
343.	Peter Chambers	"
344.	Mike Boardman	"
345.	Nick Curwen	"
346.	Chris Hamilton	"
347.	Ben Gregory	"
348.	Tim Gregory	"
349.	Graham Axon	"
350.	P.E. Sgt. A. Watt	Thames Valley Harriers
351.	Ron Bentley	Tipton Harriers
352.	Graham Ruecroft	Watford Harriers
353.	Andrew Ashwell	"
354.	Joseph Dunbar	"
355.	Kevin O'Connor	"
356.	N. Miller	Westbury Harriers
357.	M. Harris	"
358.	A. Craine	"
359.	P. Glanville	"
360.	Unnominated	Western A.C.
361.	"	"
362.	"	"
363.	"	"
364.	A. Blackwell	Wolverhampton & Bilston A.C.
365.	V. Edwards	" "
366.	C. Roberts	" "
367.	D. Clements	Unattached
368.	Joe Dunn	Unattached
369.	Paul Goodacre	Unattached
370.	Bill Sutcliffe	Unattached
371.	Iain Adams	Newcastle Uni. Past & Present
372.	Andy Bober	" "
373.	Steve Armstrong	" "
374.	Lawrence Baker	" "
375.	Simon Cumber	" "
376.	Andy Loughnoy	" "
377.	Les Issacs	" "
378.	Nick Swales	" "
379.	Chris Purdon	" "
380.	Neil Kirby	Bradford University

YOUTHS (under 17 1/9/84)

401.	B. Walsh	Derwent A.C.
402.	P. Reid	"
403.	T. Thursby	"
404.	Tony Wright	Doncaster Plant
405.	Craig Grant	"
406.	Martin Holgate	"
407.	Mark Taylor	East Cheshire Harriers & Tameside A.C.
408.	S. Dawson	Ghost Runners
409.	Simon Forster	King Henry VIII A.C.
410.	Dominic Boulton	" "
411.	Francis Longworth	" "
412.	Bernard Cannan	King William's College
413.	Richard Bennett	Liverpool Pembroke
414.	James Clague	Manx A.C.
415.	Daniel Hall	"
416.	L. McNeill	Mid-Roscommon A.C.
417.	S. O'Brien	"
418.	L. Dolan	"
419.	T. Murray	"
420.	Paul Murray	Moston Brook High School
421.	Dave Royal	" "
422.	Allan Maher	" "
423.	Paul Corkill	Northern A.C.
424.	Mike Harrison	Pilkington's A.C.
425.	J. Rutter	Rochdale Harriers
426.	C. Robinson	"
427.	Ian Kennedy	Rotherham H.A.C.
428.	Mitchell Hollyhead	"
429.	Lee Johnson	"
430.	Nigel Whitehouse	Southern A.C.
431.	Cameron Young	Stilton Striders
432.	Andrew Bourne	"
433.	Michael Brew	Western A.C.

BOYS (under 15 1/9/84)

451.	Nick Bentham	Doncaster Plant
452.	Andy Cotton	"
453.	Jeremy Bailey	"
454.	John Davies	East Cheshire Harriers & Tameside A.C.
455.	R. Thompson	Ghost Runners
456.	Andrew Headley	Hinckley Harriers
457.	Andrew Bargery	Manx A.C.
458.	John Walton	Manx A.C.
459.	Christopher Wilson	"
460.	H. McCafferty	North Sligo A.C.
461.	P. Roper	"
462.	J. Gillen	"
463.	S. O'Rourke	"
464.	Robin Lyon	Pilkington's A.C.
465.	Mark Webster	"
466.	Carl Sumner	"
467.	John McMahon	Rochdale Harriers
468.	Andrew Tomkinson	"
469.	Michael Tomkinson	"
470.	Andrew Johnson	Rotherham H.A.C.
471.	Brian Lewney	Southern A.C.
472.	Barry Salmon	"
473.	Andrew Tarry	Stilton Striders
474.	David Brew	Western A.C.
475.	Tony Duncan	Western A.C.

COLTS (under 13 1/9/84)

501.	E. McLoughlin	Boyle A.C.
502.	Nev Brooks	Doncaster Plant
503.	Kenton Thompson	East Cheshire Harriers & Tameside A.C.
504.	Mark Rhodes	" "
505.	S. Harvey	Manchester Y.M.C.A.
506.	Mark Pinnington	Manx A.C.
507.	Stephen Jacques	Pilkington's A.C.
508.	P. Boyes	"
509.	Mark Fairclough	"
510.	Paul Lyon	"
511.	Jason Evans	"
512.	Jody Rotherham	"
513.	Miles Rotherham	"
514.	Nigel Thompson	Rochdale Harriers
515.	D. Caulfield	Roscommon A.C.
516.	Christopher Beatson	Waverley Harriers

SENIOR LADIES

551.	H. Churn	Aldershot, Farnham & District
552.	Hilary Matthews	Bolton Utd. Harriers A.C.
553.	Yvonne Hurley	" "
554.	Susan Lever	" "
555.	Ann Cain	Boundary Harriers
556.	Sheena Thompson	East Cheshire Harriers & Tameside A.C.
557.	Lesley Tynon	" "
558.	T. Naughton	Galway City Harriers
559.	D. Nugent	"
560.	N. McHugh	"
561.	N. Keane	"
562.	K. Ashcroft	Ghost Runners
563.	S. Pennington	"
564.	D. Pearson	"
565.	M. Smith	"
566.	Alison McKechnie	Glasgow University Hare & Hounds
567.	Audrey Sym	" "
568.	Ann Ridley	" "
569.	Liz Davison	Houghton Harriers
570.	Anne Thorpe	Leeds University
571.	Ni-Ni Srivastava	"
572.	Tanya Pickup	"
573.	Judith Tupper	"
574.	R. Hill	Leicester University A.C.
575.	L. Breedon	" "
576.	S. Freeman	" "
577.	W. Freeman	" "
578.	E. Foster	" "
579.	Jill Rothwell	Liverpool Harriers
580.	Jane Cullen	Manchester University Past & Present
581.	Zara Hyde	" "
582.	Lucy Martin	" "
583.	Pippa Sibbald	" "
584.	Janet Stephenson	" "
585.	Charlotte Fisher	Manx A.C.
586.	Anne Gomer (VO/40)	"
587.	Debbie Cannon	"
588.	Jackie Hurst	"
589.	Christine Kissack	"

590.	Anneli Kissack	Manx A.C.
591.	Sian Pilling	"
592.	Petra Jayne Corkill	Northern A.C.
593.	Anna Taylor	North London A.C.
594.	Heidi Holland	"
595.	Sue Crehan	Bert Quennell Athletes
596.	Jackie Walton	"
597.	Janet Yates	"
598.	Mairead Cotter	Riocht A.C.
599.	Angela Cahill	"
600.	Breda Enright	"
601.	Josephine Hegerty	"
602.	Angela Tomkinson (VO/40)	Rochdale H's.
603.	Sharon Cadman	Rotherham H A.C.
604.	Helen Gent	"
605.	Ruth Wilson	"
606.	Pat Rowbotham (VO/45)	"
607.	June Wilson (VO/40)	"
608.	Jenny Gent	"
609.	June Beardsley	"
610.	Liz Collier	Sheffield University
611.	Val French	"
612.	Lynne Massey	Southern A.C.
613.	Louise A. Robinson	Spenborough & District A.C.
614.	Jean Gaunt	Stockport Harriers
615.	Vanessa Chappell	"
616.	Julie Ustianowski	"
617.	Julie Asgill	Stretford A.C.
618.	Sandra Parker	Wolverhampton & Bilston
619.	Monica J. Berry	Unattached
620.	Elaine Campo-Triplett	Unattached
621.	Janice Cockley	Newcastle University Past & Present
622.	Ruth Browning	" "
623.	Clare Smith	" "
624.	Janet Stephenson	Manchester Uni.

JUNIOR LADIES (under 15 1/9/84)

651.	S. Fryer	Ghost Runners
652.	S. Wise	"
653.	S. Woodford	"
654.	Nickola Radcliffe	Liverpool Harriers & A.C.
655.	Mandy Radcliffe	" "
656.	C. McLoughlin	Lough Ree A.C.
657.	E. Molloy	"
658.	L. Glancy	"
659.	K. Cox	"
660.	Julie Bawden	Manx A.C.
661.	Jeannette Flanagan	Pilkington's A.C.
662.	Fiona Lewis	"
663.	Joanne Hare	"
664.	Nicola Roberts	"
665.	Tony Huyton	"
666.	Louise Smith	"
667.	Melanie Moran	"
668.	Collette Sykes	Rotherham A.C.
669.	Aimi Comaish	Southern A.C.
670.	Julie Douglas	"
671.	Karen Bentley	"

GIRLS (under 13 1/9/84)

701.	S. Jackson	Derwent A.C.
702.	R. Shaw	"
703.	K. Bland	"
704.	Sharron Taylor	East Cheshire Harriers & Tameside A.C.
705.	L. Phillips	Ghost Runners
706.	J. Batchelor	"
707.	P. Denson	"
708.	R. Webber	"
709.	E. Bulpitt	"
710.	J. Ashcroft	"
711.	Claire Corkill	Northern A.C.
712.	M. Roper	North Sligo A.C.
713.	M. Lynch	"
714.	Christine Morris	Pilkington's A.C.
715.	Lisa Casey	"
716.	Kerry Gerrard	"
717.	Vicki Lyon	"
718.	Joanne Flanagan	"
719.	Rebecca Douglas	"
720.	Jennifer Dickinson	"
721.	Alison Glover	"
722.	Samantha Comaish	Southern A.C.
723.	Janette Duncan	Western A.C.
724.	Martine Fleming	"
725.	Natasha Bird	Unattached

"We cover the Island"

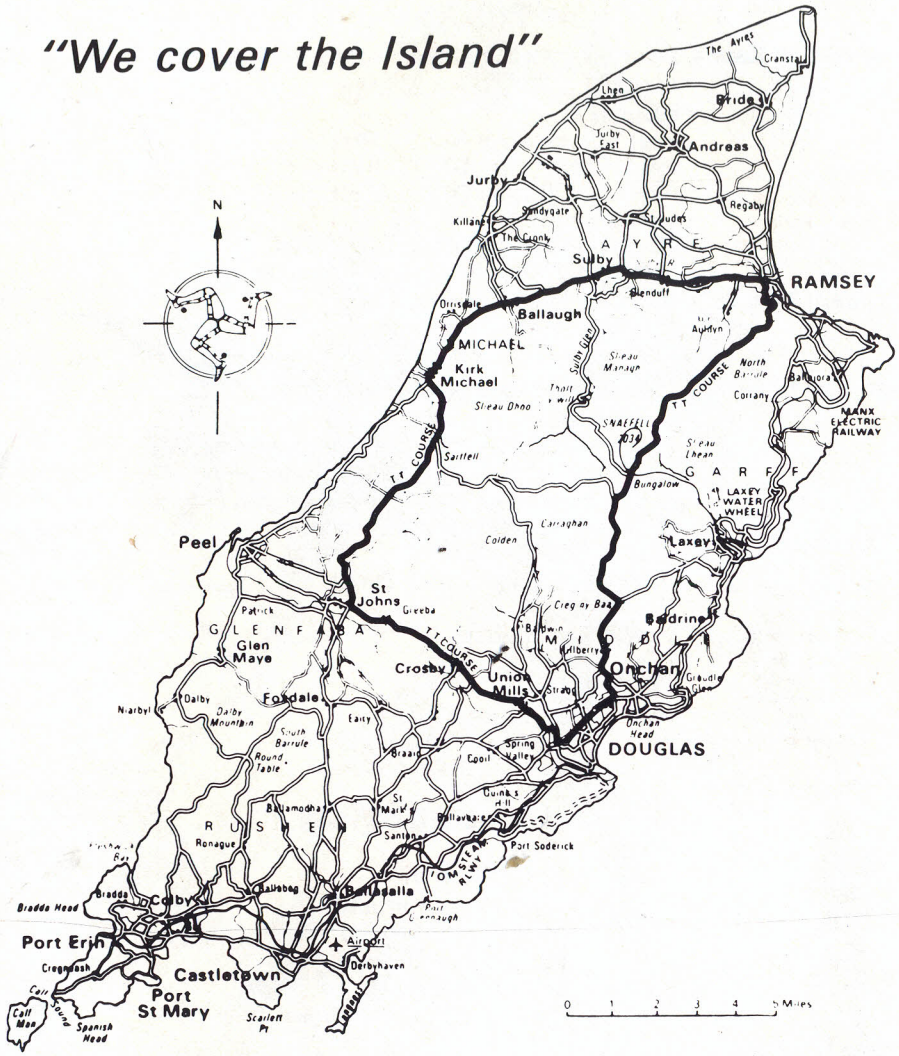

Alexander & Alexander — Local people who know local business!

At Alexander & Alexander we offer both. Our specialists are experienced professionals who know the ins-and-outs of the local business environment. And if we don't already know your business, we'll learn it. That's the only way we can give you the truly professional service you deserve. Ensure you insure with the brokers who cover the Island . . .

Local and International . . .

Alexander & Alexander (Isle of Man) Ltd.

28 Athol Street, Douglas, Isle of Man. Telephone (0624) 73325. Telex 628453

PRIZES

Friday Road Races, Sponsored by Group & Conference Travel.

First 10 Ladies. First 20 Men.
5 Spot Prizes.
First Veteran over 40. First Veteran over 45.
First Veteran over 50. First Veteran over 55.
First Veteran over 60. First Veteran over 65.
First 6 Youths.
15 Spot Prizes for Men's Event (50X)
Jeff Foster Rose Bowl (Best Manx Athlete).

Team Awards: (Men) — First, Second, Third.
(Youths) — First.
(Ladies) — First, Second, Third.

Saturday Hill Races, Sponsored by the Tourist Board.

First 20 Men.
First Veteran over 40. First Veteran over 45.
First Veteran over 50. First Veteran over 55.
First Veteran over 60. First Veteran over 65.
15 Spot Prizes for Men's Event.
First 10 Ladies.
5 Spot Prizes for Ladies' Event.
First 6 Youths.
First 3 Junior Ladies.
First 3 Boys.
First 3 Colts.
First 3 Girls.

Team Awards: (Men) — First, Second, Third.
(Ladies) — First, Second, Third.
(Youths) — First.
(Junior Ladies) — First.
(Boys) — First.
(Girls) — First. Second.

Sunday Road Races Sponsored by Summerland

Men's Road Relay (4 x 3 mile)

Team Awards: (Men) — First, Second, Third.
Men's Relay — Fastest Leg.
Men's Relay — Fastest Veteran.

Prizes Donated by The Manx A.C. —

First 10 Ladies.
5 Spot Prizes for Ladies' Event.
First 3 Junior Ladies: First 3 Girls.
First 3 Boys: First 3 Colts.

Team Awards: (Ladies) — First, Second, Third.
(Girls) — First, Second.
(Boys) — First.
(Junior Ladies) — First.

EASTER FESTIVAL WINNERS

Best Man over all three days.
Best Lady over all three days.
Students Team Prize over all three days.
Best Team over all three days.

Print Centres Limited, Braddan, Isle of Man

Best Wishes to sport, sportsmanship & sporting sorts.

WILLIAMS & GLYN'S BANK (I.O.M.) LTD.

The Manx Bank with a difference.